Online data sheet

WL9-2P430

SICK
Sensor Intelligence.

Illustration may differ

Ordering information

Type	Part no.
WL9-2P430	1018283

Other models and accessories → www.sick.com/

Detailed technical data

Features

Sensor/ detection principle	Photoelectric retro-reflective sensor
Dimensions (W x H x D)	12 mm x 40 mm x 22 mm
Housing design (light emission)	Rectangular
Sensing range max.	0 m ... 4 m [1]
Sensing range	0 m ... 3 m [1]
Type of light	Visible red light
Light source	LED

[1] Reflector PL80A.

Mechanics/electronics

Supply voltage	10 V DC ... 30 V DC
Ripple	≤ 5 V_{pp}
Power consumption	30 mA [1]
Switching output	PNP
Switching mode	Light/dark switching
Response time	≤ 625 µs [2]
Connection type	Male connector M12, 4-pin
Housing material	Plastic, ABS
Optics material	Plastic, PMMA
Enclosure rating	IP69K
Ambient operating temperature	–40 °C ... +60 °C

[1] Without load.
[2] Signal transit time with resistive load.

Ambient storage temperature	–40 °C ... +75 °C
UL File No.	NRKH.E181493 & NRKH7.E181493

[1] Without load.
[2] Signal transit time with resistive load.

Classifications

ECl@ss 5.0	27270902
ECl@ss 5.1.4	27270902
ECl@ss 6.0	27270902
ECl@ss 6.2	27270902
ECl@ss 7.0	27270902
ECl@ss 8.0	27270902
ECl@ss 8.1	27270902
ECl@ss 9.0	27270902
ETIM 5.0	EC002717
ETIM 6.0	EC002717
UNSPSC 16.0901	39121528

Adjustments possible

③ Receive indicator

Connection diagram

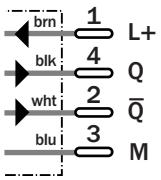

Characteristic curve

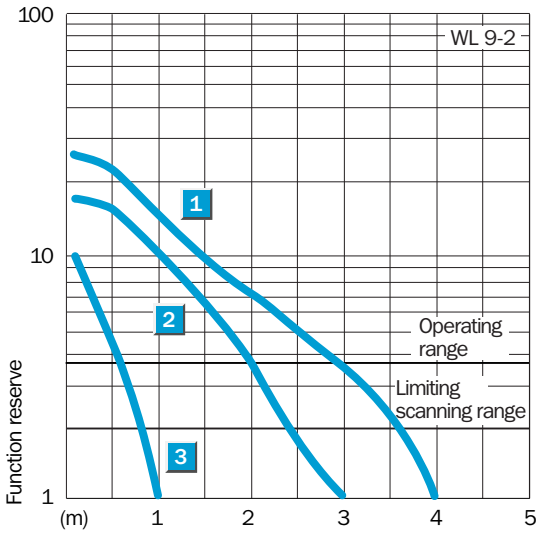

Dimensional drawing (Dimensions in mm (inch))

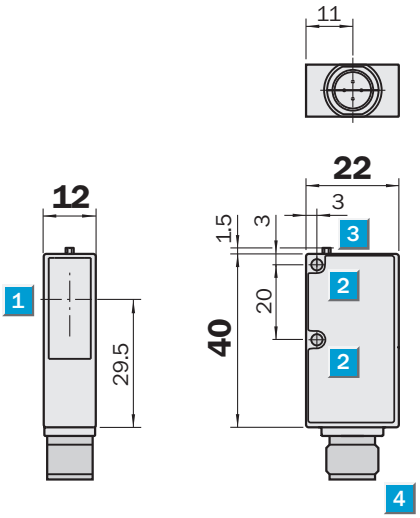

① Center of optical axis
② Mounting hole Ø 3.2 mm
③ LED signal strength indicator
④ Connector M12 or M8, 4-pin, 2 m connection cable or 120 mm cable with connector M12, 4-pin
⑤ Teach-in button

SICK AT A GLANCE

SICK is one of the leading manufacturers of intelligent sensors and sensor solutions for industrial applications. A unique range of products and services creates the perfect basis for controlling processes securely and efficiently, protecting individuals from accidents and preventing damage to the environment.

We have extensive experience in a wide range of industries and understand their processes and requirements. With intelligent sensors, we can deliver exactly what our customers need. In application centers in Europe, Asia and North America, system solutions are tested and optimized in accordance with customer specifications. All this makes us a reliable supplier and development partner.

Comprehensive services complete our offering: SICK LifeTime Services provide support throughout the machine life cycle and ensure safety and productivity.

For us, that is "Sensor Intelligence."

WORLDWIDE PRESENCE:

Contacts and other locations –www.sick.com

SICK
Sensor Intelligence.